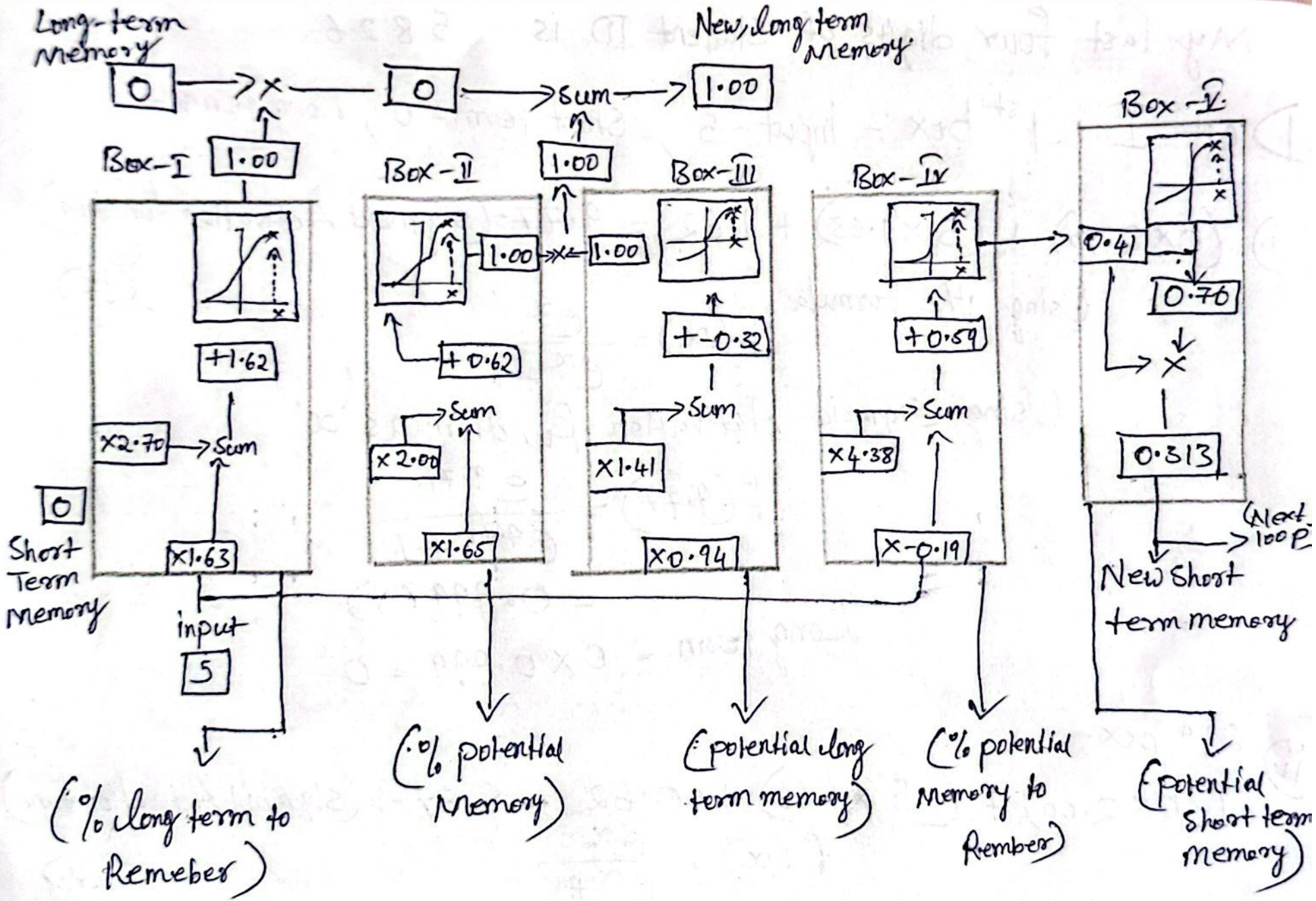
Long-term Memory
0
×
0
Sum
New, long term Memory
1.00
Box-I
1.00
+1.62
×2.70
Sum
0
Short Term memory
×1.63
input
5
(% long term to Remeber)
Box-II
1.00
+0.62
Sum
×2.00
×1.65
(% potential Memory)
1.00
×
1.00
Box-III
+-0.32
Sum
×1.41
×0.94
(potential long term memory)
Box-IV
+0.59
Sum
×4.38
×-0.19
(% potential Memory to Rember)
Box-V
0.41
0.70
×
0.313
(Next 100 P.)
New Short term memory
(potential Short term memory)

LSTM Calculation:-

My last four digits of Student ID is - "5826".

Digit-I :- 1st Box - Input - 5, Short term - 0, Long term - 0.

i.) $(0 \times 2.70) + (5 \times 1.63) + 1.62 = 9.77(x)$ (Sigmoid Activation function)

Using formula = $f(x) = \frac{e^x}{e^x + 1}$

let's Consider 9.77 in x = $f(9.77) = \frac{e^{9.77}}{e^{9.77} + 1}$

$= f(9.77) = 1.00$

Long term = $0 \times 1 = 0$

2nd Box

ii.) $(0 \times 2.00) + (5 \times 1.65) + 0.62 = 8.87(x)$ (Sigmoid Activation function)

Using formula = $f(x) = \frac{e^x}{e^x + 1}$

let's Consider 8.87 in "x" = $f(8.87) = \frac{e^{8.87}}{e^{8.87} + 1}$

$f(8.87) = 1.00$.

iii) 3rd Box

Sol

$(0 \times 1.41) + (5 \times 0.94) + -0.32$

$= 4.38(x)$ (SAF)

Using formula,

$$\tanh(x) = \frac{e^{x} - e^{-x}}{e^{x} + e^{-x}}$$

$$\tanh(4.38) = \frac{e^{4.38} - e^{-4.38}}{e^{4.38} - e^{-4.38}}$$

$\tanh(4.38) = 1.00$ (Y)

Multiplying the 2nd and 3rd boxes 'Y' values for finding out the new long term memory value.

$\rightarrow 1.00 \times 1.00 = 1.00$

Adding "I" value to the old LSTM

$= 0 + 1.00$

$= 1.00$

Where,

New LSTM is $= 1.00$.

iv) 4th Box

Sol $(0 \times 4.38) + (5 \times -0.19) + 0.59$

$= -0.36(x)$ (SAF)

Using formula,

$$f(x) = \frac{e^{x}}{e^{x} + 1}$$

$$f(-0.36) = \frac{e^{-0.36}}{e^{-0.36} + 1}$$

$f(-0.36) = 0.41$

v) 5th Box

Sol $$\tanh(x) = \frac{e^{x} - e^{-x}}{e^{x} + e^{-x}}$$

$$\tanh(1.00) = \frac{e^{1.00} - e^{-1.00}}{e^{1.00} + e^{-1.00}}$$

$\tanh(1.00) = 0.76$.

Multiplying the 4th and 5th boxes of "Y" Value's for finding out the new short term memory value.

$0.41 \times 0.76 = 0.313$

Where, The next new short term memory value is 0.313.

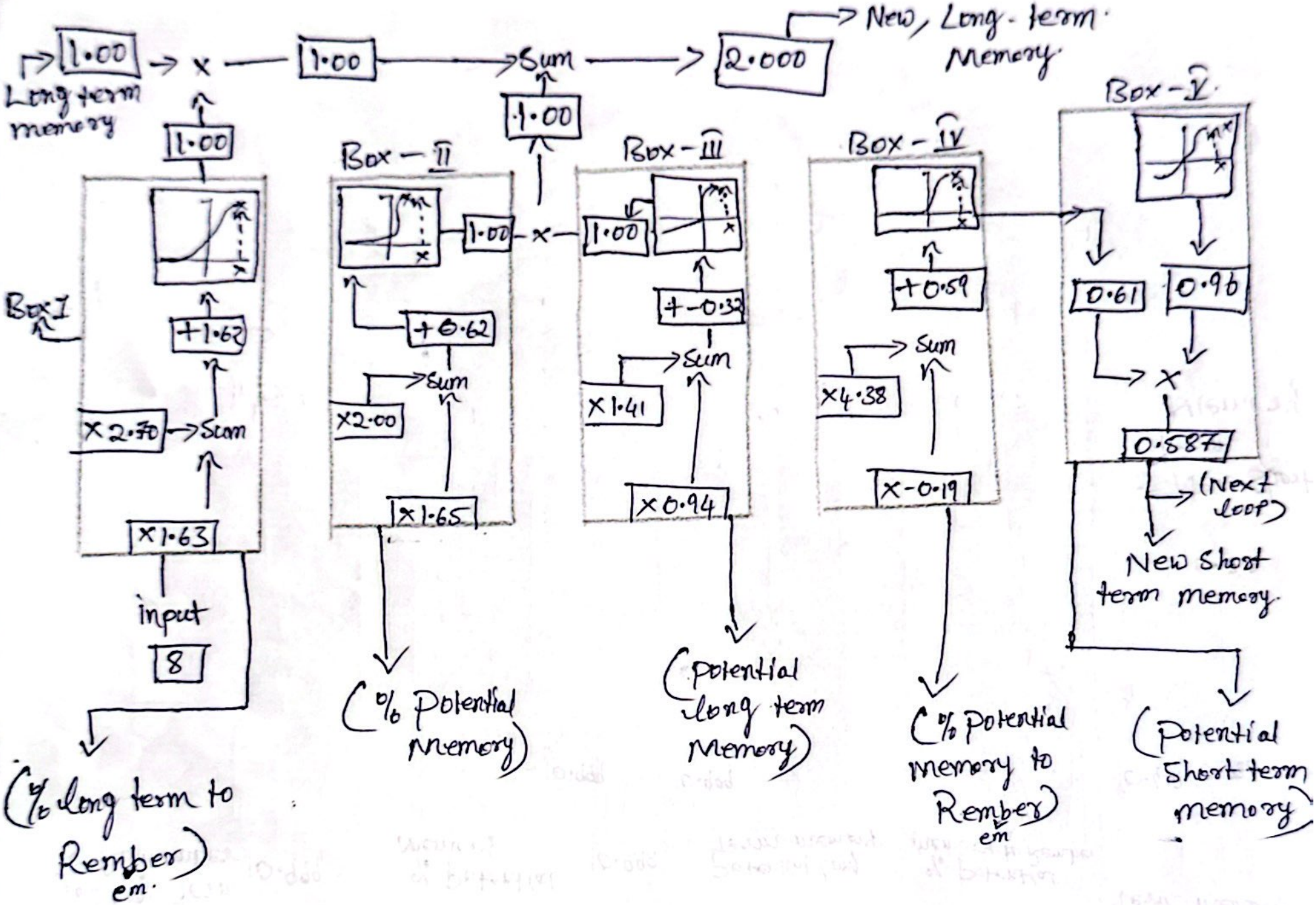
1.00
Long term memory
x
1.00
Sum
2.000
New, Long-term Memory
1.00
1.00
Box I
+1.62
x 2.70
Sum
x 1.63
input
8
(% long term to Remember em.)
Box - II
1.00
x
+0.62
Sum
x2.00
x 1.65
(% Potential Memory)
Box - III
1.00
x
+-0.32
Sum
x 1.41
x 0.94
(Potential long term Memory)
Box - IV
+0.59
Sum
x 4.38
x -0.19
(% Potential memory to Remember em)
Box - V
0.61
0.96
x
0.587
(Next loop)
New Short term memory
(Potential Short term memory)

IInd Digit:-

Short term = 0.313

Longterm = 1.00

input = 8

1st Box:-

$(0.313 \times 2.70) + (8 \times 1.63) + 1.62$

$= 15.51\ (x)\ (SAF)$

formula, $f(x) = \dfrac{e^x}{e^x + 1}$

$f(15.51) = \dfrac{e^{15.51}}{e^{15.51} + 1}$

$f(15.51) = 1.00$

longterm $= 1.00 \times 1.00$

$= 1.00$

2nd Box:-

$(0.313 \times 2.00) + (8 \times 1.65) + 0.62$

$= 14.45\ (x)\ (SAF)$

formula, $f(x) = \dfrac{e^x}{e^x + 1}$

$f(14.45) = \dfrac{e^{14.45}}{e^{14.45} + 1}$

$f(14.45) = 1.00\ (Y)$

3rd Box:-

$(0.313 \times 1.41) + (8 \times 0.94) + -0.32$

$= 7.64\ (x)\ (SAF)$

formula, $\tanh(x) = \dfrac{e^x - e^{-x}}{e^x + e^{-x}}$

$\tanh(7.64) = \dfrac{e^{7.64} - e^{-7.64}}{e^{7.64} + e^{-7.64}}$

$\tanh(7.64) = 1.00\ (Y)$

Multiplying the 2nd and 3rd Boxes of "Y" values for finding out the new long term memory value.

$\Rightarrow 1.00 \times 1.00 = 1.00$

Adding "1" value to the old lstm.

$= 1.00 + 1.00$

$= 2.000$

Where, new lstm is = 2.000

4th Box:-

$(0.313 \times 4.38) + (8 \times -0.19) + 0.59$

$= 0.44\ (x)\ (SAF)$

formula, $f(x) = \dfrac{e^x}{e^x + 1}$

$f(0.44) = \dfrac{e^{0.44}}{e^{0.44} + 1}$

$f(0.44) = 0.61\ (Y)$

5th Box: $\tanh(x) = \dfrac{e^{x} - e^{-x}}{e^{x} + e^{-x}}$

$$\tan(2.000) = \frac{e^{2.000} - e^{-2.000}}{e^{2.000} + e^{-2.000}}$$

$$\tan(2.000) = 0.96 (Y)$$

Multiplying the 4th and 5th boxes of "Y" Values for finding out the new short term memory value.

$$0.61 \times 0.96 = 0.587.$$

Where,

The next new short term memory value is 0.587.

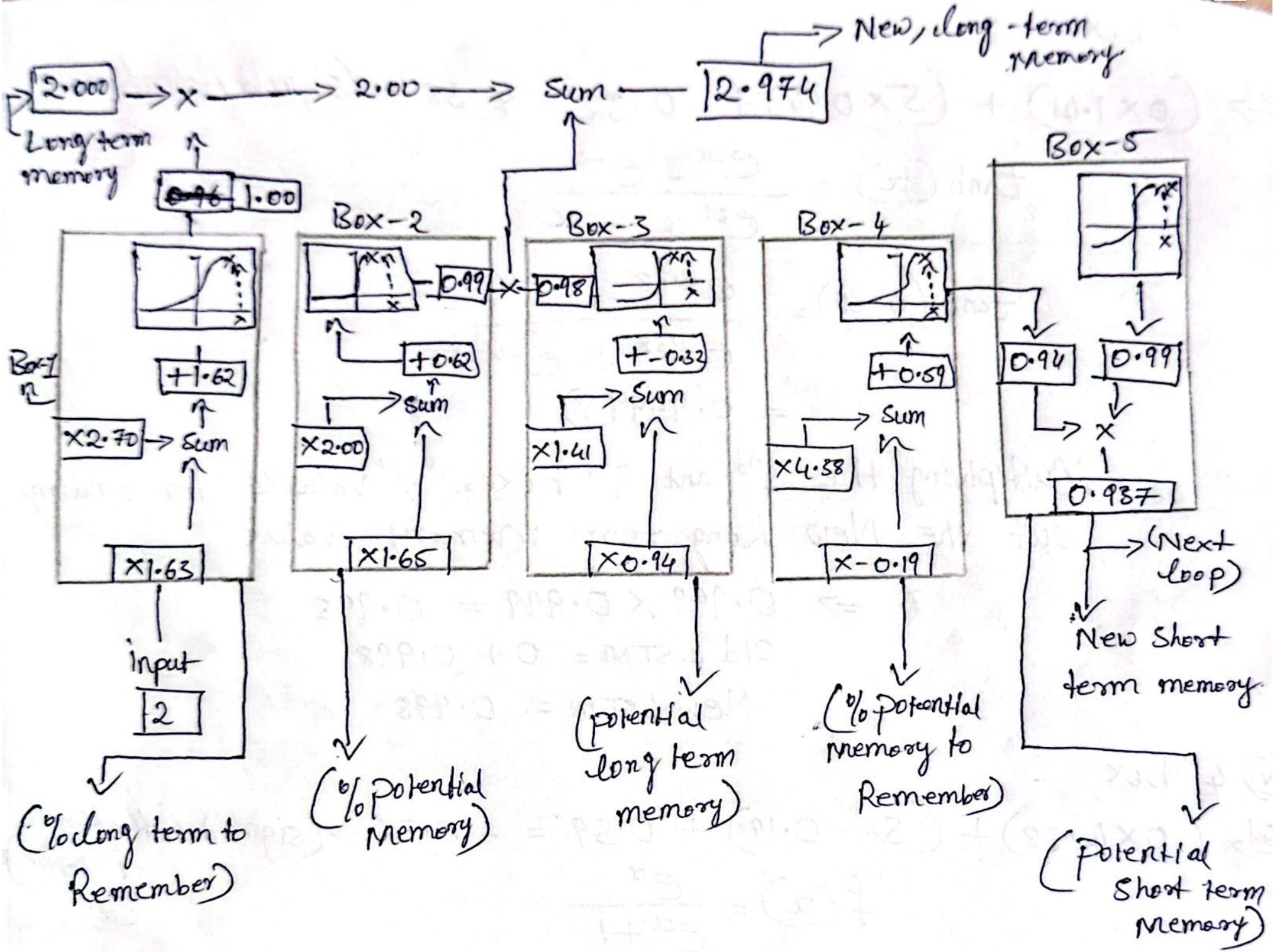
New, long-term memory
2.000
Long term memory
2.00
Sum
2.974
~~0.96~~ 1.00
Box-1
+1.62
×2.70
Sum
×1.63
input
2
(% long term to Remember)
Box-2
0.99
+0.62
Sum
×2.00
×1.65
(% Potential Memory)
Box-3
0.98
+-0.32
Sum
×1.41
×0.94
(potential long term memory)
Box-4
+0.59
Sum
×4.38
×-0.19
(% Potential memory to Remember)
Box-5
0.94
0.99
×
0.937
(Next loop)
New Short term memory
(Potential Short term Memory)

III rd Digit

Short term = 0.587

long term = 2.000

input = 2

1st Box: $(0.587 \times 2.70) + (2 \times 1.63) + 1.62$

$= 6.46\ (x)\ (SAF)$

formula, $f(x) = \dfrac{e^x}{e^x + 1}$

$f(6.46) = \dfrac{e^{6.46}}{e^{6.46} + 1}$

$f(6.46) = 1.00$

long term $= 2.000 \times 1.00$

$= 2.00$

2nd Box:

$(0.587 \times 2.00) + (2 \times 1.65) + 0.62$

$= 5.09\ (x)\ (SAF)$

$f(x) = \dfrac{e^x}{e^x + 1}$

$f(5.09) = \dfrac{e^{5.09}}{e^{5.09} + 1}$

$f(5.09) = 0.99\ (Y)$

3rd Box:

$(0.587 \times 1.41) + (2 \times 0.94) + -0.32$
$= 2.39 \ (x) \ (SAF)$

formula,
$$\tanh(x) = \frac{e^{x} - e^{-x}}{e^{x} + e^{-x}}$$

$$\tanh(2.39) = \frac{e^{2.39} - e^{-2.39}}{e^{2.39} + e^{-2.39}}$$

$$\tanh(2.39) = 0.98 \ (Y)$$

Multiplying the 2nd and 3rd boxes of "Y" values for finding out the new long term memory value.

$\Rightarrow 0.99 \times 0.98$
$\Rightarrow 0.98$ (Approx value is 0.974)

Adding "0.98" value to the old lstm.

$= 2.000 + 0.974$
$= 2.974$

Where,
New LSTM is $= 2.974$

4th Box:

$(0.587 \times 4.38) + (2 \times -0.19) + 0.59$
$= 2.78 \ (x) \ (SAF)$

formula, $$f(x) = \frac{e^{x}}{e^{x} + 1}$$

$$f(2.78) = \frac{e^{2.78}}{e^{2.78}+1}$$

$$f(2.78) = 0.94 \cdot (Y)$$

<u>5th Box:</u>

$$\tanh(x) = \frac{e^{x} - e^{-x}}{e^{x} + e^{-x}}$$

$$\tanh(2.974) = \frac{e^{2.974} - e^{-2.974}}{e^{2.974} + e^{-2.974}}$$

$$\tanh(2.974) = 0.99 \cdot (Y)$$

Multiplying the 4th and 5th boxes of "Y" Values for finding Out the New Short term Memory Value.

$\Rightarrow 0.94 \times 0.99$

$\Rightarrow 0.937$ (Approx value is 0.9306)

Where,

The New Short term Value is = 0.937//.

IV th digit

Short term = 0.937, long term = 2.974, input = 6.

After Calculating the all four digits of my last four digits of my Student ID which is "5826" We got to know the new long term memory and new Short term memory.

New long term Memory = 2.974.

New Short term memory = 0.937

Hence, the new Short term memory is the prediction for my 4th digit is:

$$\Rightarrow 6 - 0.937$$
$$\Rightarrow 5.063.$$

Therefore, The Error is = 5.063//.